CP9120CRN
Angle Grinder

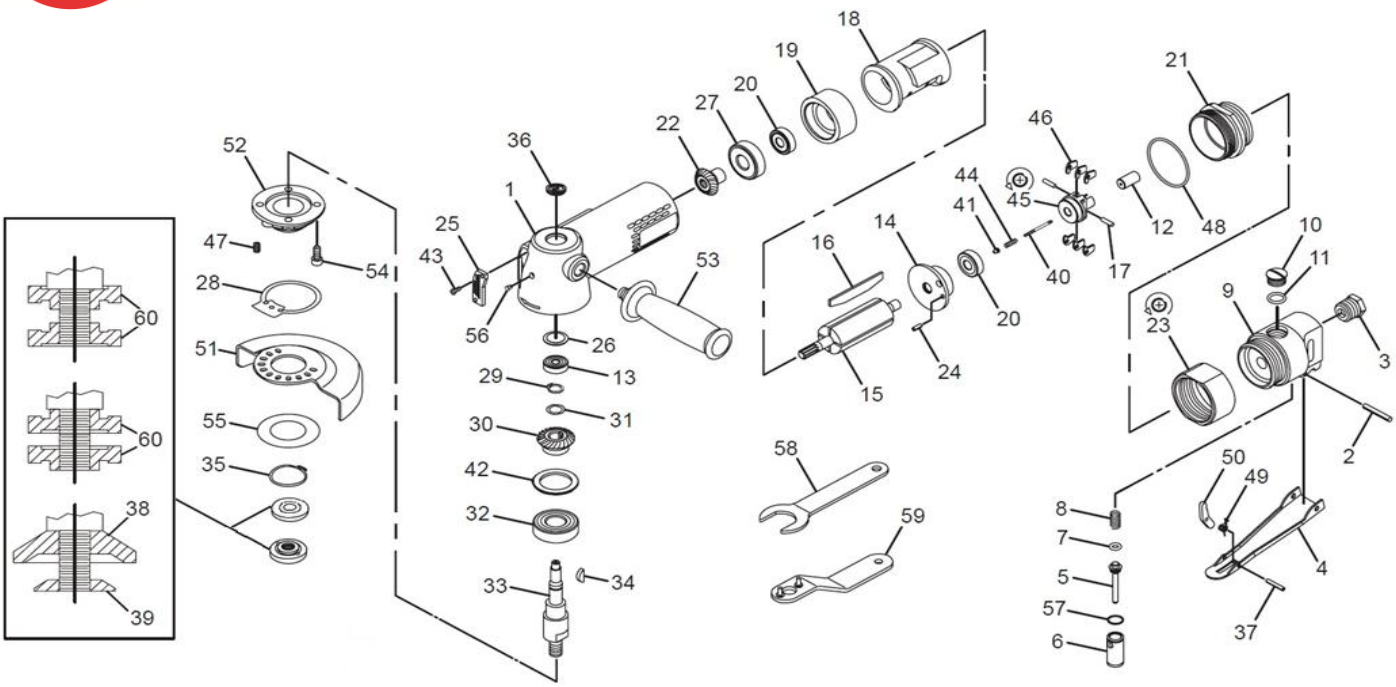

No.	Part No.	Description	Qty
1	2050533803	Motor housing	1
2	2050484613	Spring pin	1
3	2050484083	Air inlet	1
4	2050484623	Throttle Lever	1
5	2050484633	Valve shaft	1
6	2050484643	Bushing	1
7	2050533813	O-ring	1
8	2050484663	Valve spring	1
9	2050533823	Throttle valve housing	1
10	2050533833	Throttle Lever plug	1
11	2050485153	O-ring	1
12	2050484693	Plunger	1
13	2050486913	Ball bearing	1
14	2050484703	Rear end plate	1
15	2050484713	rotor	1
16	2050484723	Blade set (x4 pcs)	1
17	2050487003	Spring pin	2
18	2050484733	Cylinder	1
19	2050484743	Front end plate	1
20	2050486823	Ball bearing	2
21	2050533843	Lock nut	1
22	2050484763	bevel gear	1
23	2050533853	Coupling nut	1
24	2050487013	Spring pin	1
25	2050484783	Deflector	1
26	2050484793	Spacer	1
27	2050486953	Ball bearing	1
28	2050533863	Lock ring	1
29	2050484573	Retainer ring	1
30	2050533873	Bevel gear	1
31	2050484823	Wave washer	1
32	2050486883	Ball bearing	1
33	2050533883	Spindle	1
34	2050484843	Key	1
35	2050533903	Retainer ring	1
36	2050533913	CP logo ring	1
37	2050484203	Spring pin	1
38	2050556483	Rear Flange (3/8"-24)	1

No.	Part No.	Description	Qty
39	2050556493	Front Flange nut (3/8"-24)	1
40	2050484903	Adjust screw	1
41	2050484913	Adjust nut	1
42	2050533983	Spacer	1
43	2050484193	Screw	2
44	2050484933	Spring pin	1
45	2050484943	Governor	1
46	2050484953	Pendulum	6
47	2050533993	Spring	1
48	2050484963	O-ring	1
49	2050484973	Torsion spring	1
50	2050484983	Throttle lever lock	1
51	2050534003	4" disc guard	1
52	2050534053	Bearing cap	1
53	2050524063	Side handle	1
54	2050534063	Screw	4
55	2050534073	Spacer	1
56	2050534083	Oil cap	1
57	2050484483	O-ring	1
58	2050556503	Spanner	2
59	2050485003	Pin wrench	1
60	2050556513	Flange nut (3/8"-24)	2
	6158727980	Warning label	1
	6158726900	Warning label	1
	6158726840	Warning label	1
	6158727560	Warning label	1

Tune-up kit

2050504823 (Incl: 7,8,11,16,20)

Bevel gear kit

2050504833 (Incl: 13,22,24,27,29,30,31,32,34)

8940167754	Operator's manual
8940168434	CE declaration
6159948760	Safety manual