Chicago Pneumatic

CP1816

D-Handle Drill

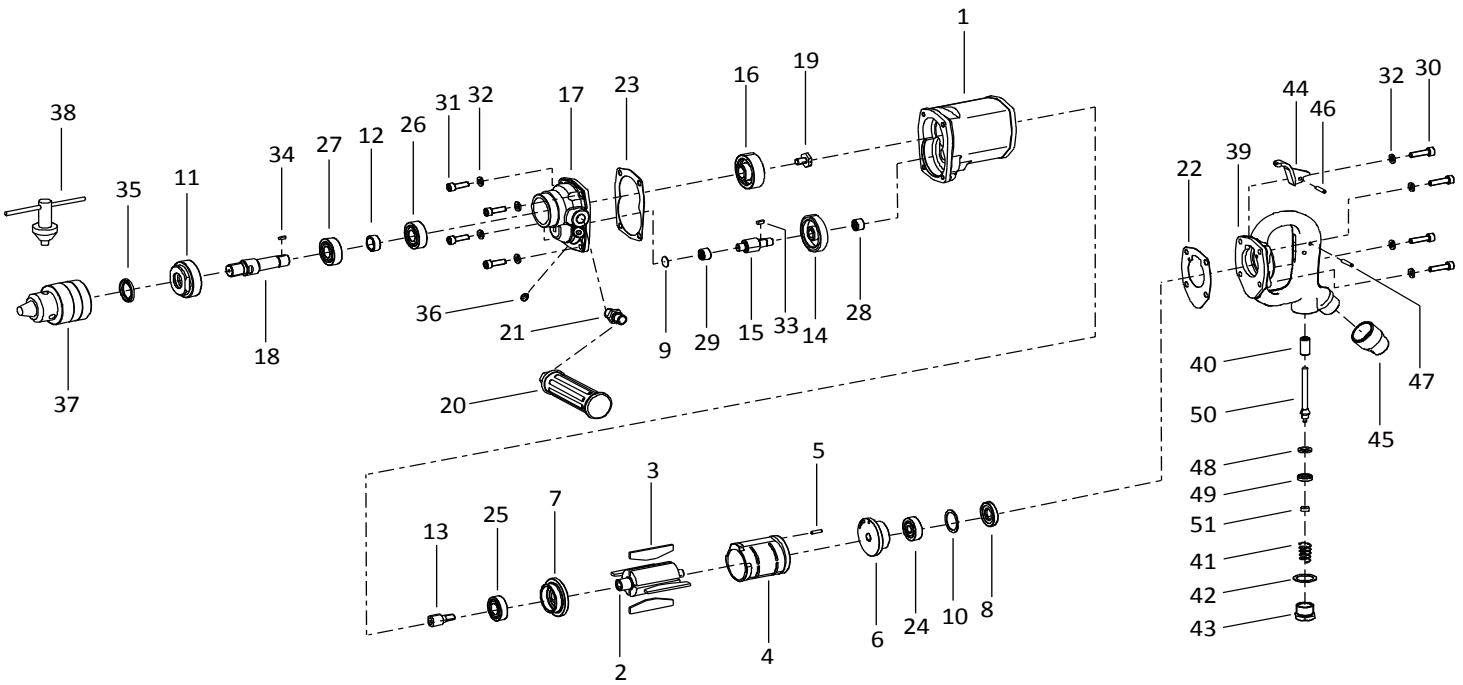

Index No.	Part No.	Description	Qty.
1	5412102917	Housing	1
2	5412051283	Rotor	1
3	5412051284	Rotor Brade	4
4	5412053719	Cylinder	1
11	5412051287	Spindle Bearing Cover	1
18	5412051302	Spindle	1
38	5412052005	Drill Chuck Handle	1
39	5412102915	Handle	1
45	5412051281	Inlet Joint(NPT)	1
A	**8940170367**	**Rear Plate Kit**	
5		Spring Pin	1
6		Cylinder Upper Plate	1
8		Bearing Cover	1
10		Packing	1
24		Ball Bearing	1
B	**8940170368**	**Front Plate Kit**	
7		Cylinder Lower Plate	1
25		Ball Bearing	1
C	**8940170369**	**First Stage Gear Kit**	
13		No.1 Pinion	1
14		No.1 Gear	1
D	**8940170370**	**Second Stage Gear Kit**	
15		No.2 Pinion	1
16		No.2 Gear	1
33		Key	1
E	**8940170371**	**Gear Case Kit**	
17		No.1 Gear Case	1
23		Packing (B)	1
36		Grease Nipple	1
F	**8940170372**	**Spindle Kit**	
18		Spindle	1
34		Key	1
G	**8940170373**	**Side Handle Kit**	
20		Dead Handle	1
21		Dead Handle Joint	1

Index No.	Part No.	Description	Qty.
H	**8940170374**	**Gasket Kit**	
22		Packing (A)	1
23		Packing (B)	1
I	**8940170375**	**Screw Kit**	
30		Cap Screw	4
31		Cap Screw	4
32		Plain Washer	8
J	**8940170376**	**Throttle Valve Kit**	
40		Throttle Valve Rod Busing	1
41		Throttle Valve Spring	1
42		Throttle Valve Cover Packing	1
43		Throttle Valve Cover	1
48		Throttle Valve	1
49		Throttle Valve Washer	1
50		Throttle Valve Rod	1
51		Sub Throttle Valve	1
K	**8940170377**	**Lever Kit**	
44		Throttle Valve Lever	1
46		Needle Rollor	1
47		Needle Rollor	1
L	**8940170378**	**Motor Bearing Kit**	
24		Ball Bearing	1
25		Ball Bearing	1
M	**8940170379**	**Second Stage Bearing Kit**	
28		Needle Bearing	1
29		Needle Bearing	1
N	**8940170382**	**Spindle Bearing Kit**	
26		Ball Bearing	1
27		Ball Bearing	1
O	**8940170380**	**Tune-up Kit**	
		include 3, 22, 23, 35, 42	
P	**8940170381**	**Small Parts Kit**	
		include 5, 9, 12, 19, 33, 34, 36, 46, 47	

6159948740	Safety instructions	1
8940170288	Operator's manual	1
5412060277	Warning Label	1

Recommended Accessories

Drill Chuck
5412052004: 16mm Dia. Max

Spare parts without part number are not sold separately - High wear parts underlined

Contact us at www.cp.com