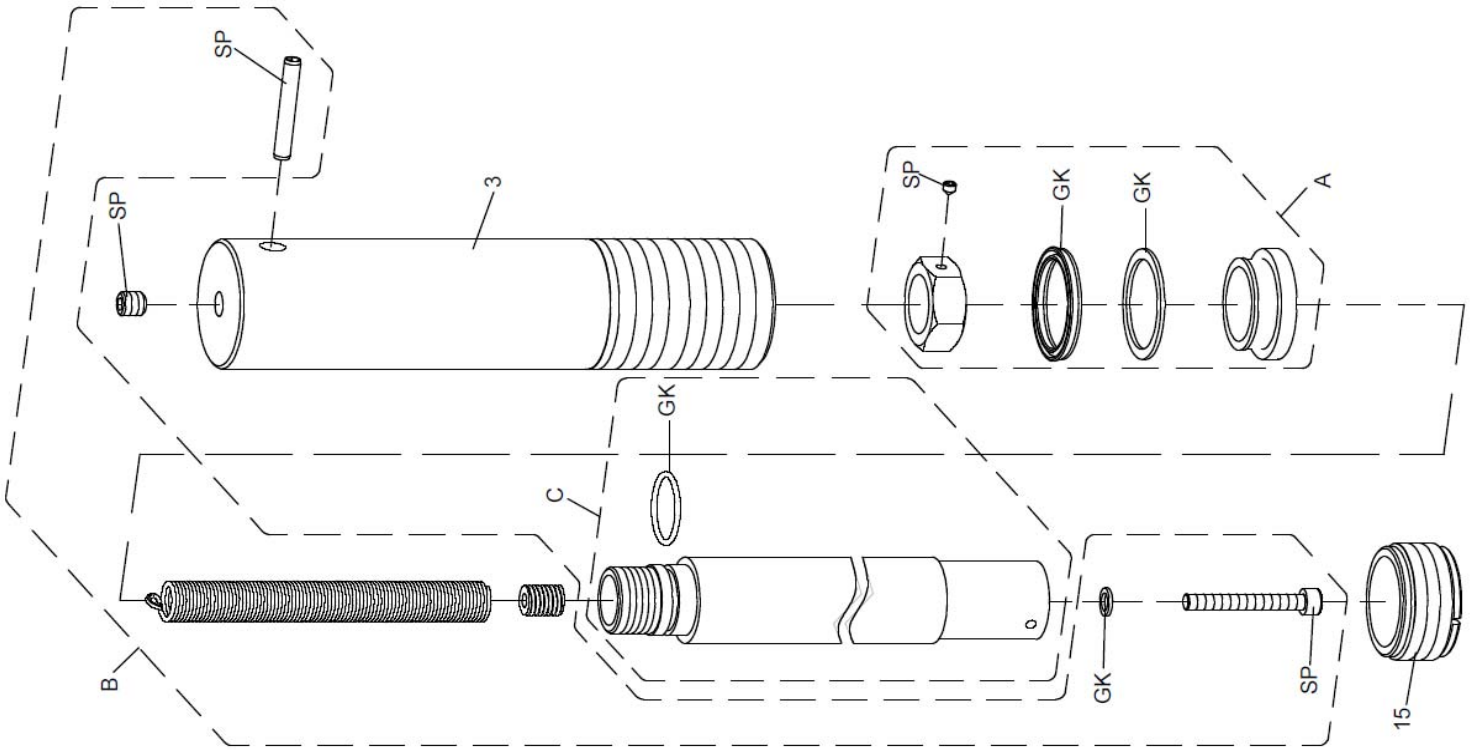

Index No.	Part No.	Description	Qty.
3	8950321518	CYLINDER	1
15	8950311678	GUIDE	1
A	8950321534	PISTON KIT	1
B	8950321535	SPRING KIT	1
C	8950321536	PISTON KIT	1
GK	8950321537	GASKET KIT	1
SP	8950380011	SMALL PARTS KIT	1

Index No.	Part No.	Description	Qty.

8940170883	Safety instructions	1
8940170386	Operator's manual	1