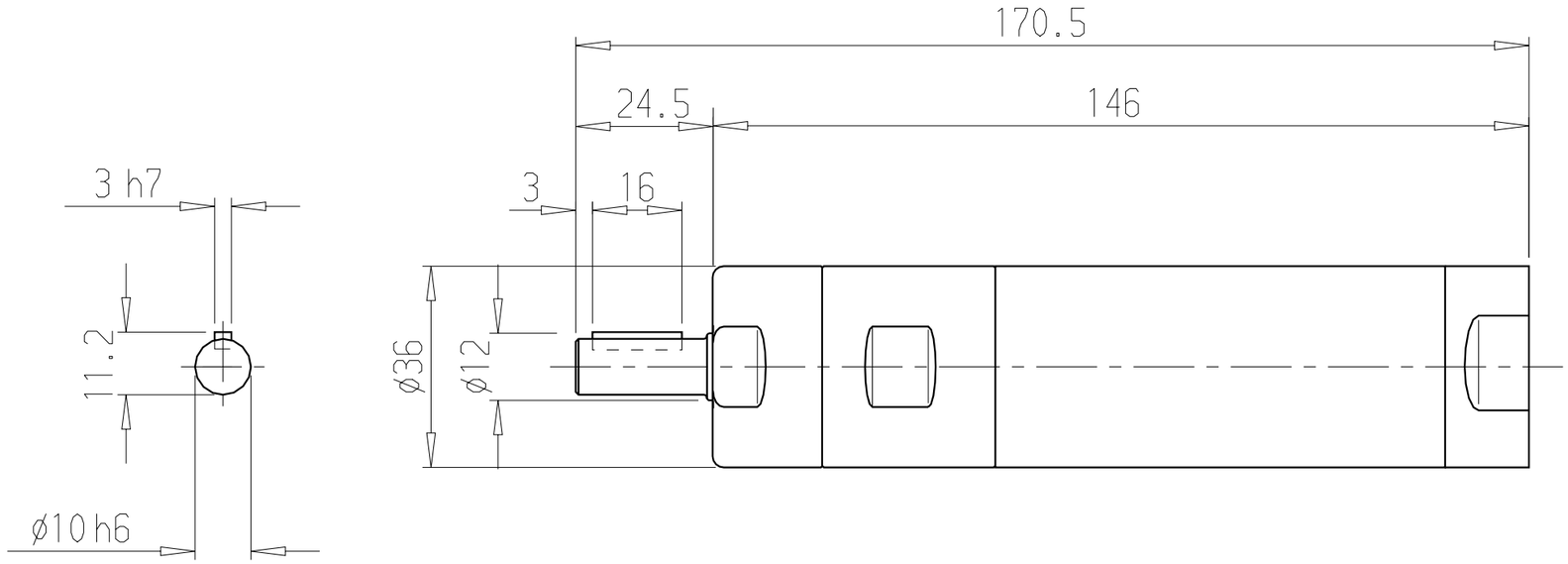

Foot
Ordering No. 205 053 6523

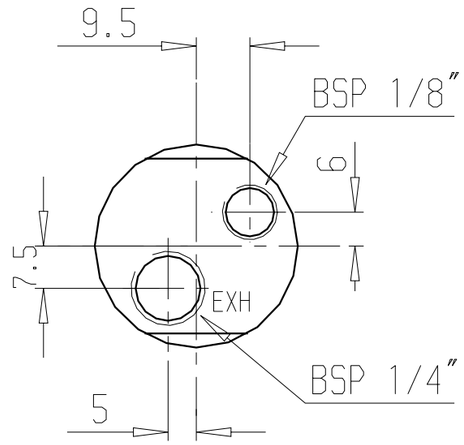
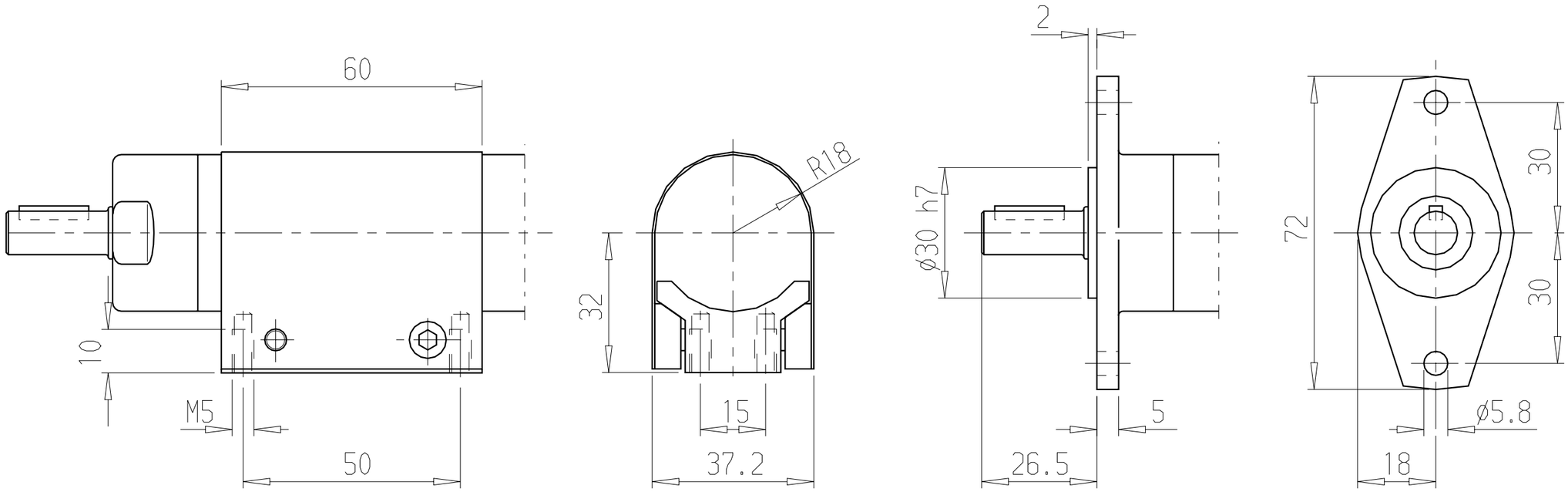
Flange
Ordering No. 205 053 6443