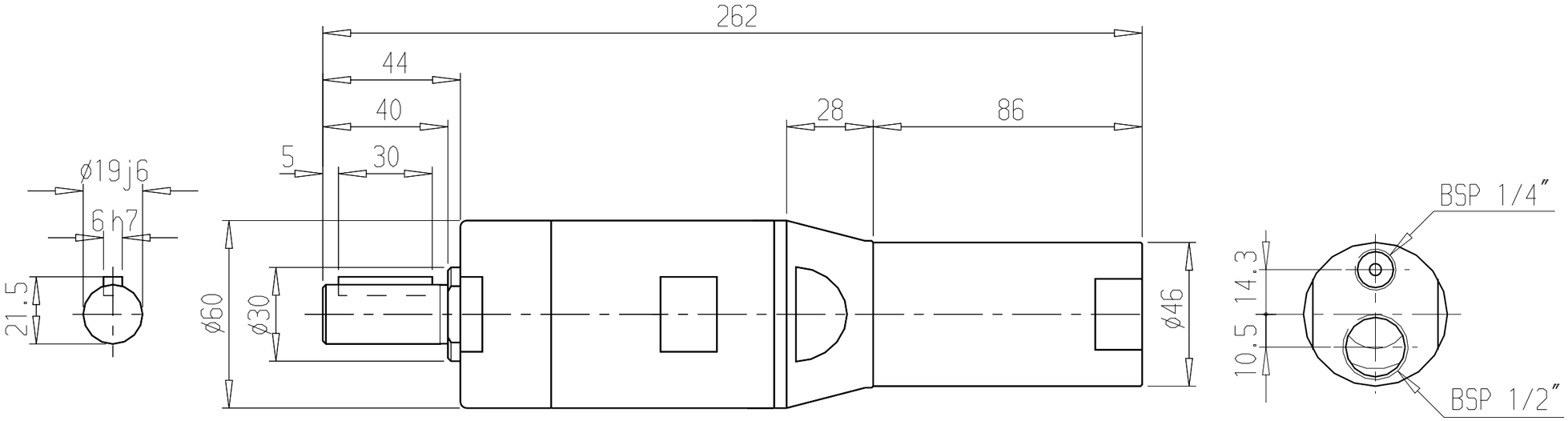

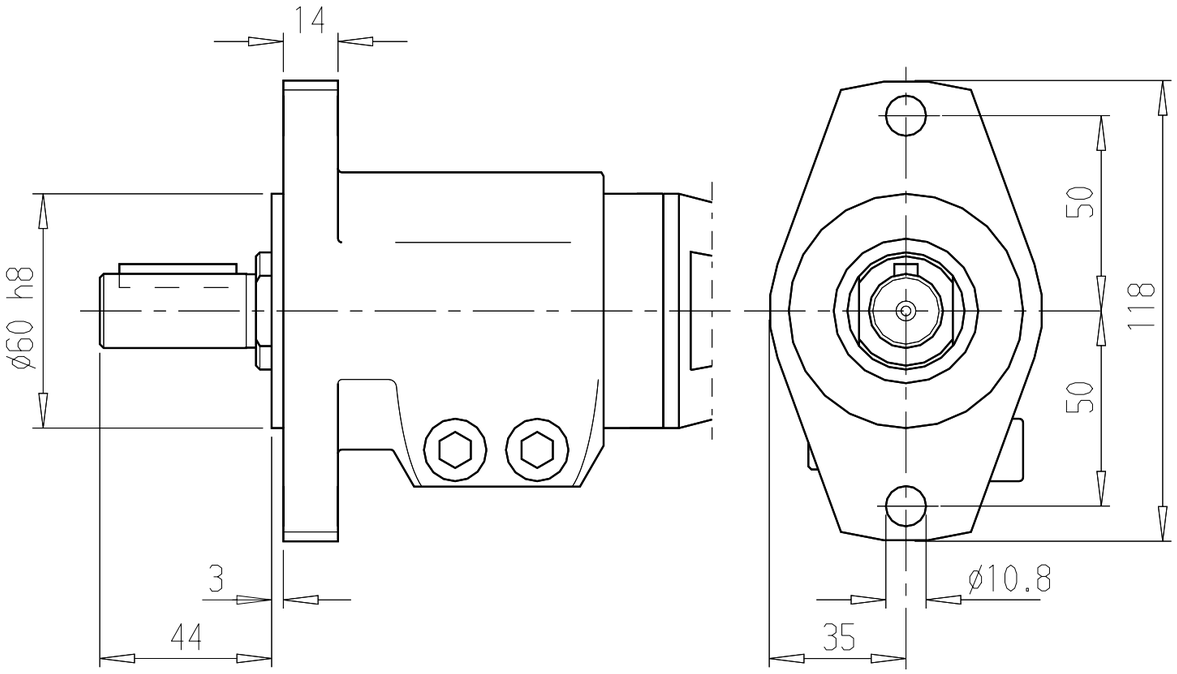

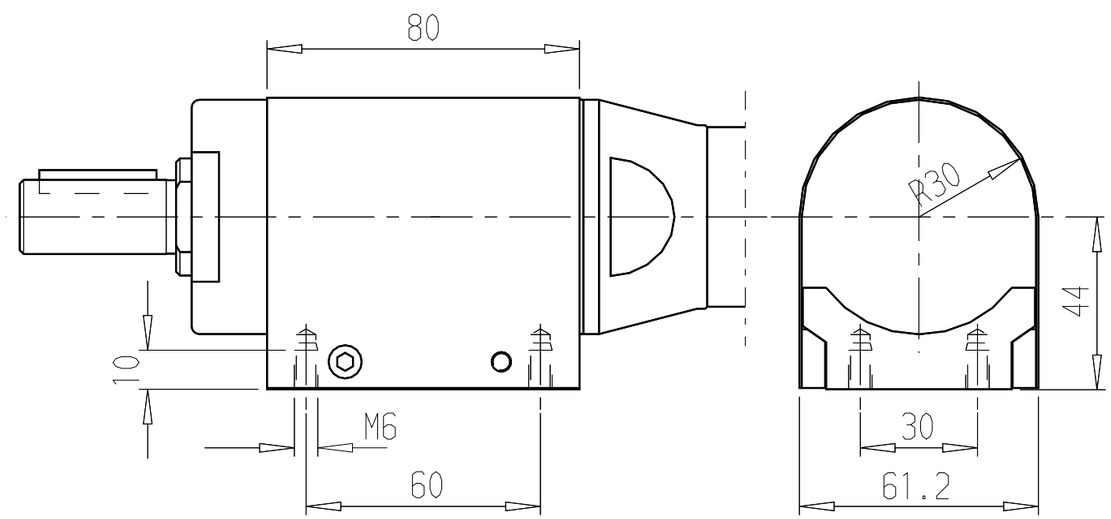

Flange Ordering No. 205 053 6423

Foot Ordering No. 205 053 6483